LINE II LED

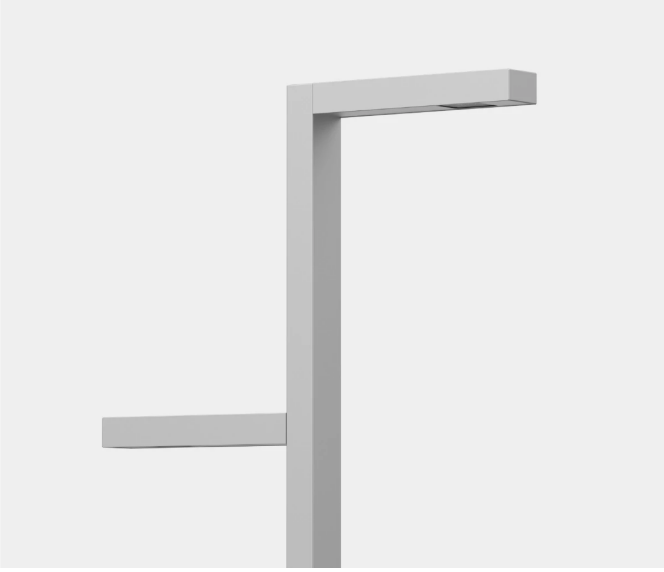

TECHNICAL DATA

Anodising	10 colours
Application	urban roads, residential roads (internal), surrounding office buildings, parks, pedestrians, parkings
Ingress protection	IP 66 for the optical part and the driver
Optical system	PMMA optics, interchangeable LED module
Material	anodised aluminium alloy, diffuser – tempered glass
Unit volume	0,7 m³ (LINE LED 4 m) 1 m³ (LINE LED 5 m) 1,2 m³ (LINE LED 6 m) 1,4 m³ (LINE LED 7 m) 1,6 m³ (LINE LED 8 m)
Expected useful lifetime	L90B10 - 100 000 h
CRI	>70
Inrush current	18 A / 280 µs (LINE LED 12 - 36 W) 32 A / 355 µs (LINE LED 48 W) 98 A / 120 µs (LINE LED 60 W)
Input voltage frequency	50 - 60Hz
Power factor	≥0,95
Number of LED	16
Control system	LED lighting set has the possibility to connect to an external control system via DALI interface (optionally via analog signal 1-10V).

Updated at: 04-11-2026

Zakład Produkcji Sprzętu Oświetleniowego „ROSA” Sp. z o.o.
43-109 Tychy, ul. Strefowa 1 tel. +48 32 73 88 901
www.rosa.pl

LINE II LED

TABLE OF VARIANTS - HEIGHTS

Symbol	Height [H]	Dimension of the base plate ([A]/[B]/[C])	Concrete footing / reinforcement basket type	Concrete footing / reinforcement basket code	Fasteners	Net weight
LINE II LED	4 m	224 / 180 / 8	B-50 / Z-50	311150 / 311205	4006	33,4 kg
LINE II LED	5 m	224 / 180 / 8	B-50 / Z-50	311150 / 311205	4006	38,5 kg
LINE II LED	6 m	400 / 300 / 12	B-70, B-71 / Z-70, Z-71	311170, 311171 / 311207, 311271	4012	57,3 kg
LINE II LED	7 m	400 / 300 / 12	B-70, B-71 / Z-70, Z-71	311170, 311171 / 311207, 311271	4012	63,9 kg
LINE II LED	8 m	400 / 300 / 12	B-70, B-71 / Z-70, Z-71	311170, 311171 / 311207, 311271	4012	70,5 kg

HOW TO GENERATE VARIANT CODES

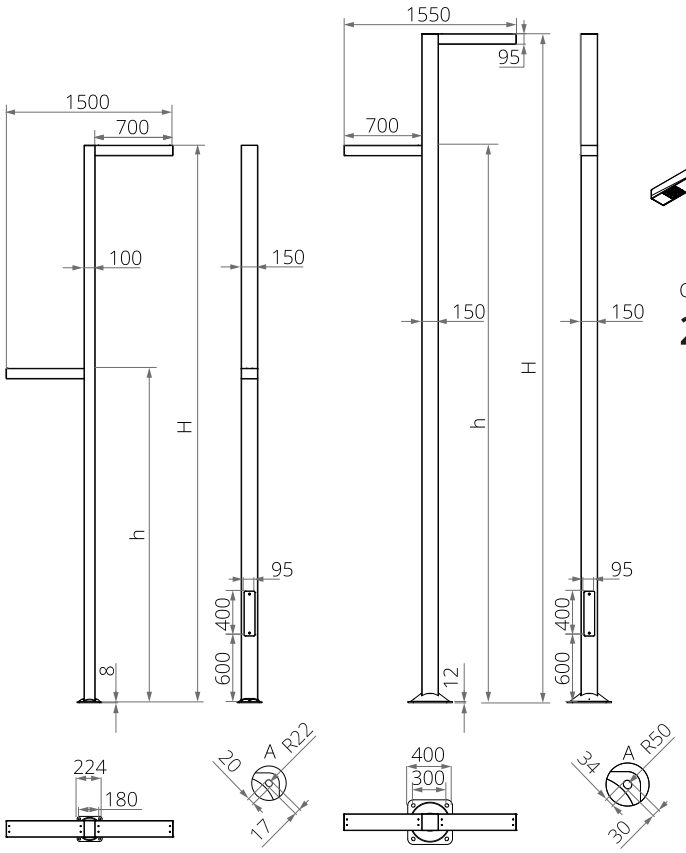

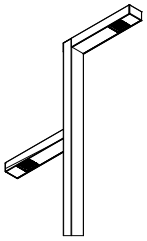

Order code

2140440/30/1/DW/30/1/T3/C45/10kV

Arm height #2 - h
40 - 4 m
50 - 5 m
60 - 6 m
70 - 7 m
80 - 8 m

Arm power variant #2
e.g. 30/1/T3 is
LINE I LED 24, 2700K,
T3 optics

Arm height #1 - H
40 - 4 m
50 - 5 m
60 - 6 m
70 - 7 m
80 - 8 m

Arm power variant #1
e.g. 30/1/DW is
LINE I LED 24, 2700K,
DW optics

TABLE OF VARIANTS - LIGHTING

Code	Symbol	LED power	Luminaire Power consumption	LED forward current	Colour temperature (CCT)	LEDs luminous flux [1]	Luminaire luminous flux [1]	Luminous efficacy
27/1/...	LINE LED 12 W	12 W	15 W	140 mA	2700 K	2450 lm	2050 lm	137 lm/W
27/3/...	LINE LED 12 W	12 W	15 W	140 mA	3500 K	2600 lm	2150 lm	143 lm/W
27/4/...	LINE LED 12 W	12 W	15 W	140 mA	4000 K	2650 lm	2200 lm	147 lm/W
27/6/...	LINE LED 12 W	12 W	15 W	140 mA	5000 K	2600 lm	2150 lm	143 lm/W
30/1/...	LINE LED 24 W	24 W	26 W	250 mA	2700 K	4250 lm	3550 lm	137 lm/W
30/3/...	LINE LED 24 W	24 W	26 W	250 mA	3500 K	4450 lm	3700 lm	142 lm/W

Zakład Produkcji Sprzętu Oświetleniowego „ROSA” Sp. z o.o.
43-109 Tychy, ul. Strefowa 1 tel. +48 32 73 88 901
www.rosa.pl

LINE II LED

Code	Symbol	LED power	Luminaire Power consumption	LED forward current	Colour temperature (CCT)	LEDs luminous flux [1]	Luminaire luminous flux [1]	Luminous efficacy
30/4/...	LINE LED 24 W	24 W	26 W	250 mA	4000 K	4600 lm	3800 lm	146 lm/W
30/6/...	LINE LED 24 W	24 W	26 W	250 mA	5000 K	4500 lm	3750 lm	144 lm/W
32/1/...	LINE LED 36 W	36 W	39 W	375 mA	2700 K	6200 lm	5150 lm	132 lm/W
32/3/...	LINE LED 36 W	36 W	39 W	375 mA	3500 K	6500 lm	5400 lm	138 lm/W
32/4/...	LINE LED 36 W	36 W	39 W	375 mA	4000 K	6650 lm	5500 lm	141 lm/W
32/6/...	LINE LED 36 W	36 W	39 W	375 mA	5000 K	6550 lm	5450 lm	140 lm/W
33/1/...	LINE LED 48 W	48 W	54 W	500 mA	2700 K	7950 lm	6600 lm	122 lm/W
33/3/...	LINE LED 48 W	48 W	54 W	500 mA	3500 K	8300 lm	6900 lm	128 lm/W
33/4/...	LINE LED 48 W	48 W	54 W	500 mA	4000 K	8550 lm	7100 lm	131 lm/W
33/6/...	LINE LED 48 W	48 W	54 W	500 mA	5000 K	8450 lm	7000 lm	130 lm/W
34/1/...	LINE LED 60 W	60 W	67 W	625 mA	2700 K	9650 lm	8000 lm	119 lm/W
34/3/...	LINE LED 60 W	60 W	67 W	625 mA	3500 K	10100 lm	8400 lm	125 lm/W
34/4/...	LINE LED 60 W	60 W	67 W	625 mA	4000 K	10350 lm	8600 lm	128 lm/W
34/6/...	LINE LED 60 W	60 W	67 W	625 mA	5000 K	10250 lm	8500 lm	128 lm/W

1) tolerance +/- 5% due to LEDs accuracy
2) symbol of chosen optical system eg. 30/6/T3 is a braket LINE II LED 24 with T3 optical system, 5000K

Finish: option of elastomer protection in the colour of LED lighting sets up to the height of 350 mm (as standard for CI63, CI65, CI75, CI78 interference colors)

DIRECTIVES AND STANDARDS

DIRECTIVES: 2014/35/UE (Official Journal of the UE L 96/357 29.03.2014), 2014/30/UE (Official Journal of the UE L 96/79 29.03.2014), 2011/65/UE RoHS (Official Journal of the UE L 174/88 01.07.2011), 2009/125/EC(Official Journal of the UE L 285/10 31.10.2009)
STANDARDS: PN-EN IEC 60598-1: 2021-7, PN-EN 60598-2-3: 2006, PN-EN 60529: 2003, PN-EN 62262: 2003, PN-EN 62471:2010, PN-EN 55015: 2019, PN-EN 61547: 2009, PN-EN 61000-3-2: 2019 , PN-EN 61000-3-3: 2014

Lighting parameters presented based on laboratory tests according to IESNA LM-79-19

TECHNICAL DRAWING

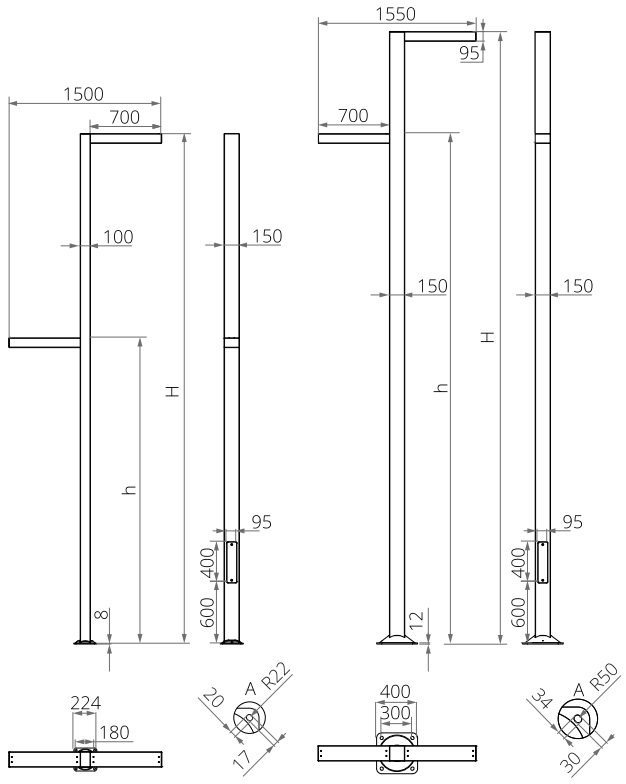

PHOTOMETRIC CURVES

Zakład Produkcji Sprzętu Oświetleniowego „ROSA” Sp. z o.o.
43-109 Tychy, ul. Strefowa 1 tel. +48 32 73 88 901
www.rosa.pl

LINE II LED

DW

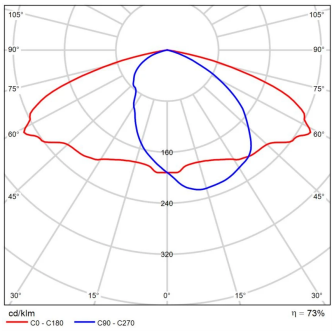

LN

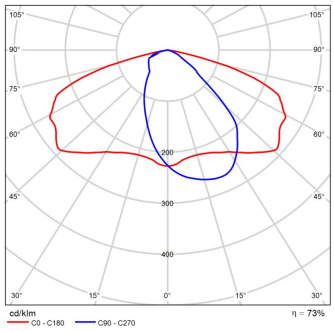

T3

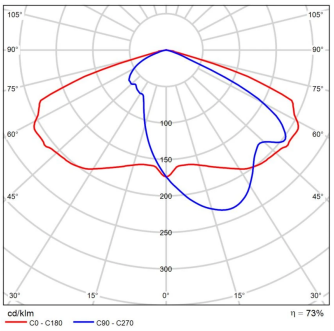

LW

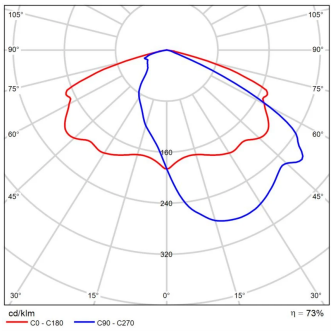

T4

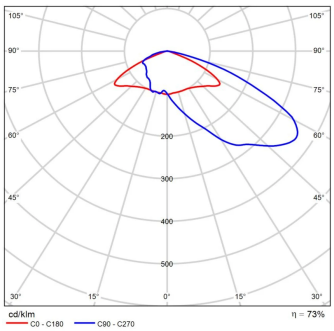

PP

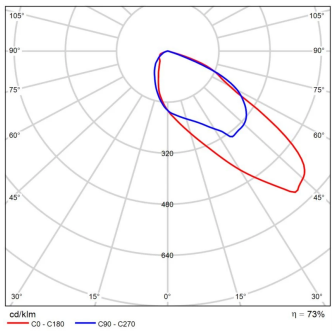

PL

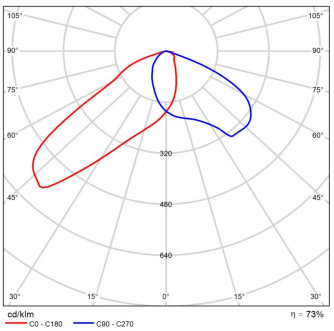

P2

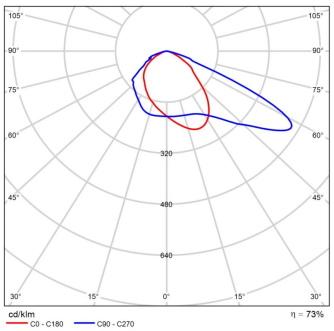

POWER SYSTEM FUNCTIONS

Luminaire in standard has following functions of intelligent power supply:

– Connection to outside control system by DALI interface (operation of analog signal 1-10V as an option),
– Possibility of programming multistage dimming of luminaire, up to 5 intervals in the range of from 10 to 100% of nominal power,
– LED module equipped with thermal protection implemented via an NTC thermistor,
– Regulation of power / luminous flux – the option of setting another value than the catalogue in the range of 30-100% of nominal one,

ACCEPTABLE HEIGHT

LINE II LED-4/5	Acceptable height of the LED lighting set			
Field category	I zone Vref. = 22 m/s	I & III zone, up to 450m a.s.l. Vref. = 24 m/s	II zone Vref. = 26 m/s	III zone up to 755m a.s.l. Vref. = 28 m/s
I	6	5,5	5	4,5
II	6	5,5	5,5	5
III	6	6	5,5	5,5
IV	6	6	6	6

LINE II LED-6/7/8	Acceptable height of the LED lighting set			
Field category	I zone Vref. = 22 m/s	I & III zone, up to 450m a.s.l. Vref. = 24 m/s	II zone Vref. = 26 m/s	III zone up to 755m a.s.l. Vref. = 28 m/s
I	7,5	7	6,5	6
II	8	7,5	7	6,5
III	8	8	7,5	7
IV	8	8	8	7,5

Zakład Produkcji Sprzętu Oświetleniowego „ROSA” Sp. z o.o.
43-109 Tychy, ul. Strefowa 1 tel. +48 32 73 88 901
www.rosa.pl