SIMPLE CUT LED

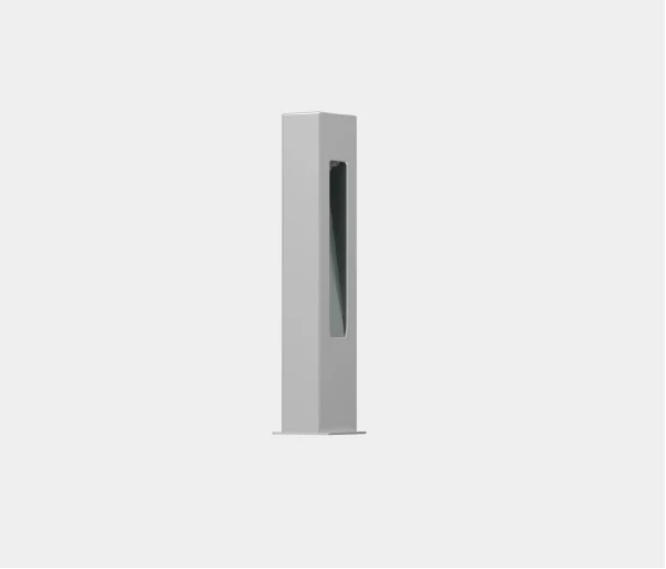

TECHNICAL DATA

Application	surrounding office buildings, parks, pedestrians
Colour	inox / grey
Ingress protection	IP 66 for the optical part and the driver
Material	anodised aluminium alloy
Unit volume	0.022 m³
Expected useful lifetime	L90B10 - 100 000 h
CRI	>70
Inrush current	70 A / 220 µs
Input voltage frequency	50 - 60Hz
Number of LED	4

TABLE OF VARIANTS

Code	Symbol	Height of the column [H]	LED power	Luminaire power consumption	Colour temperature (CCT)	LEDs luminous flux[1]	Luminaire luminous flux[1]	Luminous efficacy[1]	Concrete footing / reinforcement basket type	Net weight
215908/1	SIMPLE CUT LED 8	700 mm	8 W	12 W	2700 K	1350 lm	800 lm	67 lm/W	B-0A / Z-0A	4,5 kg
215908/3	SIMPLE CUT LED 8	700 mm	8 W	12 W	3500 K	1450 lm	850 lm	71 lm/W	B-0A / Z-0A	4,5 kg
215908/4	SIMPLE CUT LED 8	700 mm	8 W	12 W	4000 K	1500 lm	900 lm	75 lm/W	B-0A / Z-0A	4,5 kg
215908/6	SIMPLE CUT LED 8	700 mm	8 W	12 W	5000 K	1500 lm	900 lm	75 lm/W	B-0A / Z-0A	4,5 kg

1) tolerance +/- 7% due to LEDs accuracy

DIRECTIVES AND STANDARDS

DIRECTIVES: 2014/35/UE (Official Journal of the UE L 96/357 29.03.2014), 2014/30/UE (Official Journal of the UE L 96/79 29.03.2014), 2011/65/UE RoHS (Official Journal of the UE L 174/88 01.07.2011), 2009/125/EC(Official Journal of the UE L 285/10 31.10.2009)
STANDARDS: PN-EN IEC 60598-1: 2021-7, PN-EN 60598-2-3: 2006, PN-EN 60529: 2003, PN-EN 62262: 2003, PN-EN 62471:2010, PN-EN 55015: 2019, PN-EN 61547: 2009, PN-EN 61000-3-2: 2019 , PN-EN 61000-3-3: 2014

Lighting parameters presented based on laboratory tests according to IESNA LM-79-19

Zakład Produkcji Sprzętu Oświetleniowego „ROSA” Sp. z o.o.
43-109 Tychy, ul. Strefowa 1 tel. +48 32 73 88 901
www.rosa.pl

SIMPLE CUT LED

TECHNICAL DRAWING

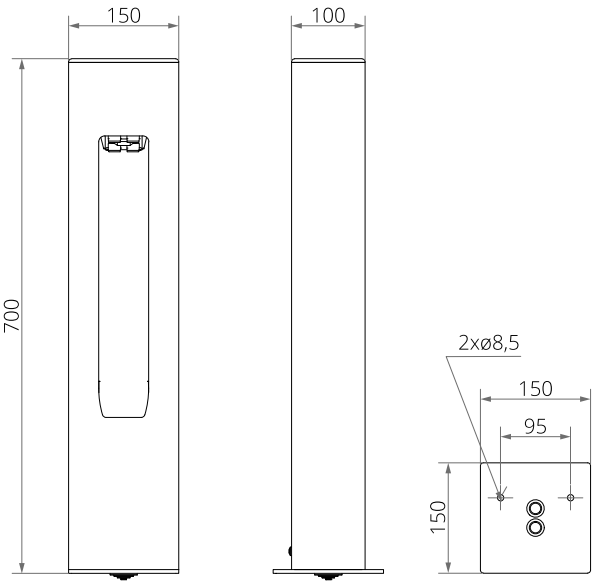

PHOTOMETRIC CURVES

SIMPLE CUT LED

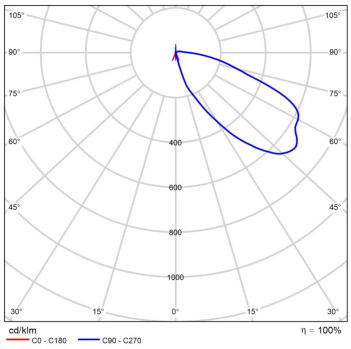

ACCETABLE QUANTITY OF LUMINAIRES ON ONE CIRCUIT

Overcurrent switches MCB type B or C

Lighting columns	Type	2A	4A	6A	10A	16A	20A	25A
SIMPLE CUT LED	B	1	2	3	5	8	10	12
	C	1	3	5	8	13	16	20

Fuse – type gG and GL

Lighting columns	2A	4A	6A	10A	16A	20A	25A
SIMPLE CUT LED	0	3	5	7	15	20	29

Zakład Produkcji Sprzętu Oświetleniowego „ROSA” Sp. z o.o.
43-109 Tychy, ul. Strefowa 1 tel. +48 32 73 88 901
www.rosa.pl