CUDDLE II LED ALFA REG D4I

TECHNICAL DATA

Anodising	10 colours
Assembly	directly on column with ⌀ 60 x 180 mm ending or on extension arm with ⌀ 60 x 100 mm ending
Application	motorways and expressway, urban roads, residential roads (internal), pedestrians, parkings
Colour	inox / black
Ingress protection	IP 66 for the optical part and the driver
Optical system	PMMA optics, interchangeable LED module, PC-UV diffuser
Material	anodised aluminium alloy
Unit volume	0,024 m³ (48 W - 72 W) 0,033 m³ (96 W - 144 W)
Operating temperature range	from -40°C to +40°C
Expected useful lifetime	L90B10 - 100 000 h
CRI	>70
Inrush current	49 A / 290 µs (48 W - 72 W) 24 A / 60 µs (96 W - 144 W) 85 A / 215 µs (192 W)
Input voltage frequency	50 - 60Hz
Power factor	≥0,95
Number of LED	24 (48 W, 60 W, 72 W); 64 (96 W, 120 W, 144 W, 192 W)
Control system	Luminaire can be connected to an external control system and / or sensors via socket compatible with Zhaga Book 18

TABLE OF VARIANTS

Code	Symbol	LED power	Luminaire power consumption	LED forward current	Colour temperature (CCT)	LEDs luminous flux[1]	Luminaire luminous flux[1]	Luminous efficacy[1]	D4i socket	Net weight
2225133/A/1/...[2]	CUDDLE II LED ALFA REG D4i 48	48 W	55 W	700 mA	2700 K	8150 lm	6950 lm	126 lm/W	1 ↑	6,7 kg
2225133/A/3/...[2]	CUDDLE II LED ALFA REG D4i 48	48 W	55 W	700 mA	3500 K	8650 lm	7350 lm	134 lm/W	1 ↑	6,7 kg
2225133/A/4/...[2]	CUDDLE II LED ALFA REG D4i 48	48 W	55 W	700 mA	4000 K	9150 lm	7800 lm	142 lm/W	1 ↑	6,7 kg
2225133/A/6/...[2]	CUDDLE II LED ALFA REG D4i 48	48 W	55 W	700 mA	5000 K	9150 lm	7800 lm	142 lm/W	1 ↑	6,7 kg
2225134/A/1/...[2]	CUDDLE II LED ALFA REG D4i 60	60 W	67 W	830 mA	2700 K	9300 lm	7950 lm	119 lm/W	1 ↑	6,7 kg
2225134/A/3/...[2]	CUDDLE II LED ALFA REG D4i 60	60 W	67 W	830 mA	3500 K	9850 lm	8400 lm	125 lm/W	1 ↑	6,7 kg
2225134/A/4/...[2]	CUDDLE II LED ALFA REG D4i 60	60 W	67 W	830 mA	4000 K	10450 lm	8900 lm	133 lm/W	1 ↑	6,7 kg
2225134/A/6/...[2]	CUDDLE II LED ALFA REG D4i 60	60 W	67 W	830 mA	5000 K	10450 lm	8900 lm	133 lm/W	1 ↑	6,7 kg
2225135/A/1/...[2]	CUDDLE II LED ALFA REG D4i 72	72 W	79 W	1000 mA	2700 K	10700 lm	9100 lm	115 lm/W	1 ↑	6,7 kg
2225135/A/3/...[2]	CUDDLE II LED ALFA REG D4i 72	72 W	79 W	1000 mA	3500 K	11350 lm	9700 lm	123 lm/W	1 ↑	6,7 kg
2225135/A/4/...[2]	CUDDLE II LED ALFA REG D4i 72	72 W	79 W	1000 mA	4000 K	12100 lm	10300 lm	130 lm/W	1 ↑	6,7 kg
2225135/A/6/...[2]	CUDDLE II LED ALFA REG D4i 72	72 W	79 W	1000 mA	5000 K	12100 lm	10300 lm	130 lm/W	1 ↑	6,7 kg
2225137/A/1/...[2]	CUDDLE II LED ALFA REG D4i 96	96 W	105 W	500 mA	2700 K	16000 lm	13650 lm	130 lm/W	1 ↑	9,5 kg
2225137/A/3/...[2]	CUDDLE II LED ALFA REG D4i 96	96 W	105 W	500 mA	3500 K	16950 lm	14450 lm	138 lm/W	1 ↑	9,5 kg
2225137/A/4/...[2]	CUDDLE II LED ALFA REG D4i 96	96 W	105 W	500 mA	4000 K	18000 lm	15350 lm	146 lm/W	1 ↑	9,5 kg
2225137/A/6/...[2]	CUDDLE II LED ALFA REG D4i 96	96 W	105 W	500 mA	5000 K	18000 lm	15350 lm	146 lm/W	1 ↑	9,5 kg
2225139/A/1/...[2]	CUDDLE II LED ALFA REG D4i 120	120 W	129 W	625 mA	2700 K	19250 lm	16400 lm	127 lm/W	1 ↑	9,5 kg
2225139/A/3/...[2]	CUDDLE II LED ALFA REG D4i 120	120 W	129 W	625 mA	3500 K	20500 lm	17450 lm	135 lm/W	1 ↑	9,5 kg
2225139/A/4/...[2]	CUDDLE II LED ALFA REG D4i 120	120 W	129 W	625 mA	4000 K	21700 lm	18500 lm	143 lm/W	1 ↑	9,5 kg
2225139/A/6/...[2]	CUDDLE II LED ALFA REG D4i 120	120 W	129 W	625 mA	5000 K	21700 lm	18500 lm	143 lm/W	1 ↑	9,5 kg
2225141/A/1/...[2]	CUDDLE II LED ALFA REG D4i 144	144 W	154 W	750 mA	2700 K	22350 lm	19050 lm	124 lm/W	1 ↑	9,5 kg
2225141/A/3/...[2]	CUDDLE II LED ALFA REG D4i 144	144 W	154 W	750 mA	3500 K	23750 lm	20250 lm	131 lm/W	1 ↑	9,5 kg
2225141/A/4/...[2]	CUDDLE II LED ALFA REG D4i 144	144 W	154 W	750 mA	4000 K	25150 lm	21450 lm	139 lm/W	1 ↑	9,5 kg
2225141/A/6/...[2]	CUDDLE II LED ALFA REG D4i 144	144 W	154 W	750 mA	5000 K	25150 lm	21450 lm	139 lm/W	1 ↑	9,5 kg
2225146/A/1/...[2]	CUDDLE II LED ALFA REG D4i 192	192 W	205 W	1000 mA	2700 K	27850 lm	23750 lm	116 lm/W	1 ↑	9,7 kg
2225146/A/3/...[2]	CUDDLE II LED ALFA REG D4i 192	192 W	205 W	1000 mA	3500 K	29600 lm	25250 lm	123 lm/W	1 ↑	9,7 kg

Updated at: 12-10-2026

Zakład Produkcji Sprzętu Oświetleniowego „ROSA" Sp. z o.o.
43-109 Tychy, ul. Strefowa 1 tel. +48 32 73 88 901
www.rosa.pl

CUDDLE II LED ALFA REG D4I

2225146/A/4/...²	CUDDLE II LED ALFA REG D4i 192	192 W	205 W	1000 mA	4000 K	31350 lm	26700 lm	130 lm/W	1 ↑	9,7 kg
2225146/A/6/...²	CUDDLE II LED ALFA REG D4i 192	192 W	205 W	1000 mA	5000 K	31350 lm	26700 lm	130 lm/W	1 ↑	9,7 kg
2225333/A/1/...²	CUDDLE II LED ALFA REG D4i D 48	48 W	55 W	700 mA	2700 K	8150 lm	6950 lm	126 lm/W	1 ↓	6,7 kg
2225333/A/3/...²	CUDDLE II LED ALFA REG D4i D 48	48 W	55 W	700 mA	3500 K	8650 lm	7350 lm	134 lm/W	1 ↓	6,7 kg
2225333/A/4/...²	CUDDLE II LED ALFA REG D4i D 48	48 W	55 W	700 mA	4000 K	9150 lm	7800 lm	142 lm/W	1 ↓	6,7 kg
2225333/A/6/...²	CUDDLE II LED ALFA REG D4i D 48	48 W	55 W	700 mA	5000 K	9150 lm	7800 lm	142 lm/W	1 ↓	6,7 kg
2225334/A/1/...²	CUDDLE II LED ALFA REG D4i D 60	60 W	67 W	830 mA	2700 K	9300 lm	7950 lm	119 lm/W	1 ↓	6,7 kg
2225334/A/3/...²	CUDDLE II LED ALFA REG D4i D 60	60 W	67 W	830 mA	3500 K	9850 lm	8400 lm	125 lm/W	1 ↓	6,7 kg
2225334/A/4/...²	CUDDLE II LED ALFA REG D4i D 60	60 W	67 W	830 mA	4000 K	10450 lm	8900 lm	133 lm/W	1 ↓	6,7 kg
2225334/A/6/...²	CUDDLE II LED ALFA REG D4i D 60	60 W	67 W	830 mA	5000 K	10450 lm	8900 lm	133 lm/W	1 ↓	6,7 kg
2225335/A/1/...²	CUDDLE II LED ALFA REG D4i D 72	72 W	79 W	1000 mA	2700 K	10700 lm	9100 lm	115 lm/W	1 ↓	6,7 kg
2225335/A/3/...²	CUDDLE II LED ALFA REG D4i D 72	72 W	79 W	1000 mA	3500 K	11350 lm	9700 lm	123 lm/W	1 ↓	6,7 kg
2225335/A/4/...²	CUDDLE II LED ALFA REG D4i D 72	72 W	79 W	1000 mA	4000 K	12100 lm	10300 lm	130 lm/W	1 ↓	6,7 kg
2225335/A/6/...²	CUDDLE II LED ALFA REG D4i D 72	72 W	79 W	1000 mA	5000 K	12100 lm	10300 lm	130 lm/W	1 ↓	6,7 kg
2225337/A/1/...²	CUDDLE II LED ALFA REG D4i D 96	96 W	105 W	500 mA	2700 K	16000 lm	13650 lm	130 lm/W	1 ↓	9,5 kg
2225337/A/3/...²	CUDDLE II LED ALFA REG D4i D 96	96 W	105 W	500 mA	3500 K	16950 lm	14450 lm	138 lm/W	1 ↓	9,5 kg
2225337/A/4/...²	CUDDLE II LED ALFA REG D4i D 96	96 W	105 W	500 mA	4000 K	18000 lm	15350 lm	146 lm/W	1 ↓	9,5 kg
2225337/A/6/...²	CUDDLE II LED ALFA REG D4i D 96	96 W	105 W	500 mA	5000 K	18000 lm	15350 lm	146 lm/W	1 ↓	9,5 kg
2225339/A/1/...²	CUDDLE II LED ALFA REG D4i D 120	120 W	129 W	625 mA	2700 K	19250 lm	16400 lm	127 lm/W	1 ↓	9,5 kg
2225339/A/3/...²	CUDDLE II LED ALFA REG D4i D 120	120 W	129 W	625 mA	3500 K	20500 lm	17450 lm	135 lm/W	1 ↓	9,5 kg
2225339/A/4/...²	CUDDLE II LED ALFA REG D4i D 120	120 W	129 W	625 mA	4000 K	21700 lm	18500 lm	143 lm/W	1 ↓	9,5 kg
2225339/A/6/...²	CUDDLE II LED ALFA REG D4i D 120	120 W	129 W	625 mA	5000 K	21700 lm	18500 lm	143 lm/W	1 ↓	9,5 kg
2225341/A/1/...²	CUDDLE II LED ALFA REG D4i D 144	144 W	154 W	750 mA	2700 K	22350 lm	19050 lm	124 lm/W	1 ↓	9,5 kg
2225341/A/3/...²	CUDDLE II LED ALFA REG D4i D 144	144 W	154 W	750 mA	3500 K	23750 lm	20250 lm	131 lm/W	1 ↓	9,5 kg
2225341/A/4/...²	CUDDLE II LED ALFA REG D4i D 144	144 W	154 W	750 mA	4000 K	25150 lm	21450 lm	139 lm/W	1 ↓	9,5 kg
2225341/A/6/...²	CUDDLE II LED ALFA REG D4i D 144	144 W	154 W	750 mA	5000 K	25150 lm	21450 lm	139 lm/W	1 ↓	9,5 kg
2225346/A/1/...²	CUDDLE II LED ALFA REG D4i D 192	192 W	205 W	1000 mA	2700 K	27850 lm	23750 lm	116 lm/W	1 ↓	9,7 kg
2225346/A/3/...²	CUDDLE II LED ALFA REG D4i D 192	192 W	205 W	1000 mA	3500 K	29600 lm	25250 lm	123 lm/W	1 ↓	9,7 kg
2225346/A/4/...²	CUDDLE II LED ALFA REG D4i D 192	192 W	205 W	1000 mA	4000 K	31350 lm	26700 lm	130 lm/W	1 ↓	9,7 kg
2225346/A/6/...²	CUDDLE II LED ALFA REG D4i D 192	192 W	205 W	1000 mA	5000 K	31350 lm	26700 lm	130 lm/W	1 ↓	9,7 kg
2225533/A/1/...²	CUDDLE II LED ALFA REG D4i x2 48	48 W	55 W	700 mA	2700 K	8150 lm	6950 lm	126 lm/W	1 ↑ / 1 ↓	6,7 kg
2225533/A/3/...²	CUDDLE II LED ALFA REG D4i x2 48	48 W	55 W	700 mA	3500 K	8650 lm	7350 lm	134 lm/W	1 ↑ / 1 ↓	6,7 kg
2225533/A/4/...²	CUDDLE II LED ALFA REG D4i x2 48	48 W	55 W	700 mA	4000 K	9150 lm	7800 lm	142 lm/W	1 ↑ / 1 ↓	6,7 kg
2225533/A/6/...²	CUDDLE II LED ALFA REG D4i x2 48	48 W	55 W	700 mA	5000 K	9150 lm	7800 lm	142 lm/W	1 ↑ / 1 ↓	6,7 kg
2225534/A/1/...²	CUDDLE II LED ALFA REG D4i x2 60	60 W	67 W	830 mA	2700 K	9300 lm	7950 lm	119 lm/W	1 ↑ / 1 ↓	6,7 kg
2225534/A/3/...²	CUDDLE II LED ALFA REG D4i x2 60	60 W	67 W	830 mA	3500 K	9850 lm	8400 lm	125 lm/W	1 ↑ / 1 ↓	6,7 kg
2225534/A/4/...²	CUDDLE II LED ALFA REG D4i x2 60	60 W	67 W	830 mA	4000 K	10450 lm	8900 lm	133 lm/W	1 ↑ / 1 ↓	6,7 kg
2225534/A/6/...²	CUDDLE II LED ALFA REG D4i x2 60	60 W	67 W	830 mA	5000 K	10450 lm	8900 lm	133 lm/W	1 ↑ / 1 ↓	6,7 kg
2225535/A/1/...²	CUDDLE II LED ALFA REG D4i x2 72	72 W	79 W	1000 mA	2700 K	10700 lm	9100 lm	115 lm/W	1 ↑ / 1 ↓	6,7 kg
2225535/A/3/...²	CUDDLE II LED ALFA REG D4i x2 72	72 W	79 W	1000 mA	3500 K	11350 lm	9700 lm	123 lm/W	1 ↑ / 1 ↓	6,7 kg
2225535/A/4/...²	CUDDLE II LED ALFA REG D4i x2 72	72 W	79 W	1000 mA	4000 K	12100 lm	10300 lm	130 lm/W	1 ↑ / 1 ↓	6,7 kg
2225535/A/6/...²	CUDDLE II LED ALFA REG D4i x2 72	72 W	79 W	1000 mA	5000 K	12100 lm	10300 lm	130 lm/W	1 ↑ / 1 ↓	6,7 kg
2225537/A/1/...²	CUDDLE II LED ALFA REG D4i x2 96	96 W	105 W	500 mA	2700 K	16000 lm	13650 lm	130 lm/W	1 ↑ / 1 ↓	9,5 kg
2225537/A/3/...²	CUDDLE II LED ALFA REG D4i x2 96	96 W	105 W	500 mA	3500 K	16950 lm	14450 lm	138 lm/W	1 ↑ / 1 ↓	9,5 kg
2225537/A/4/...²	CUDDLE II LED ALFA REG D4i x2 96	96 W	105 W	500 mA	4000 K	18000 lm	15350 lm	146 lm/W	1 ↑ / 1 ↓	9,5 kg
2225537/A/6/...²	CUDDLE II LED ALFA REG D4i x2 96	96 W	105 W	500 mA	5000 K	18000 lm	15350 lm	146 lm/W	1 ↑ / 1 ↓	9,5 kg
2225539/A/1/...²	CUDDLE II LED ALFA REG D4i x2 120	120 W	129 W	625 mA	2700 K	19250 lm	16400 lm	127 lm/W	1 ↑ / 1 ↓	9,5 kg
2225539/A/3/...²	CUDDLE II LED ALFA REG D4i x2 120	120 W	129 W	625 mA	3500 K	20500 lm	17450 lm	135 lm/W	1 ↑ / 1 ↓	9,5 kg
2225539/A/4/...²	CUDDLE II LED ALFA REG D4i x2 120	120 W	129 W	625 mA	4000 K	21700 lm	18500 lm	143 lm/W	1 ↑ / 1 ↓	9,5 kg
2225539/A/6/...²	CUDDLE II LED ALFA REG D4i x2 120	120 W	129 W	625 mA	5000 K	21700 lm	18500 lm	143 lm/W	1 ↑ / 1 ↓	9,5 kg
2225541/A/1/...²	CUDDLE II LED ALFA REG D4i x2 144	144 W	154 W	750 mA	2700 K	22350 lm	19050 lm	124 lm/W	1 ↑ / 1 ↓	9,5 kg
2225541/A/3/...²	CUDDLE II LED ALFA REG D4i x2 144	144 W	154 W	750 mA	3500 K	23750 lm	20250 lm	131 lm/W	1 ↑ / 1 ↓	9,5 kg
2225541/A/4/...²	CUDDLE II LED ALFA REG D4i x2 144	144 W	154 W	750 mA	4000 K	25150 lm	21450 lm	139 lm/W	1 ↑ / 1 ↓	9,5 kg
2225541/A/6/...²	CUDDLE II LED ALFA REG D4i x2 144	144 W	154 W	750 mA	5000 K	25150 lm	21450 lm	139 lm/W	1 ↑ / 1 ↓	9,5 kg
2225546/A/1/...²	CUDDLE II LED ALFA REG D4i x2 192	192 W	205 W	1000 mA	2700 K	27850 lm	23750 lm	116 lm/W	1 ↑ / 1 ↓	9,7 kg
2225546/A/3/...²	CUDDLE II LED ALFA REG D4i x2 192	192 W	205 W	1000 mA	3500 K	29600 lm	25250 lm	123 lm/W	1 ↑ / 1 ↓	9,7 kg

Zakład Produkcji Sprzętu Oświetleniowego „ROSA” Sp. z o.o.
43-109 Tychy, ul. Strefowa 1 tel. +48 32 73 88 901
www.rosa.pl

CUDDLE II LED ALFA REG D4I

2225546/A/4/...²	CUDDLE II LED ALFA REG D4i x2 192	192 W	205 W	1000 mA	4000 K	31350 lm	26700 lm	130 lm/W	1 ↑ / 1 ↓	9,7 kg
2225546/A/6/...²	CUDDLE II LED ALFA REG D4i x2 192	192 W	205 W	1000 mA	5000 K	31350 lm	26700 lm	130 lm/W	1 ↑ / 1 ↓	9,7 kg

1) tolerance +/- 5% due to LEDs accuracy
2) symbol of chosen optical system eg. 2225133/6/T2 is CUDDLE II LED REG D4i 48 5000K with T2 optical system
↑ - D4i socket from top, ↓ - D4i socket from bottom, ↓↑ - D4i socket from top and bottom
/A... – ALPHA version of the luminaire, e.g. 2225133/A/1/T2 is the CUDDLE II LED ALFA REG D4i 48 2700K luminaire with T2 optical system

*For the CUDDLE II LED ALFA REG D4i luminaire with P2 and PL optics it is possible to choose an additional light colour temperature: 5700K. The product code is then supplemented with the designation '/7'. Example: 22251/A33/7/P2 -CUDDLE II LED ALFA REG D4i 48W 5700K luminaire with P2 optics

DIRECTIVES AND STANDARDS

DIRECTIVES: 2014/35/UE (Official Journal of the UE L 96/357 29.03.2014), 2014/30/UE (Official Journal of the UE L 96/79 29.03.2014), 2011/65/UE RoHS (Official Journal of the UE L 174/88 01.07.2011), 2009/125/EC(Official Journal of the UE L 285/10 31.10.2009)
STANDARDS: PN-EN IEC 60598-1: 2021-7, PN-EN 60598-2-3: 2006, PN-EN 60529: 2003, PN-EN 62262: 2003, PN-EN 62471:2010, PN-EN 55015: 2019, PN-EN 61547: 2009, PN-EN 61000-3-2: 2019 , PN-EN 61000-3-3: 2014, PN-EN 62722-2-1 (tq=40°C)

Lighting parameters presented based on laboratory tests according to IESNA LM-79-19

REMOVING ELECTROSTATIC CHARGE FROM LED LUMINAIRE BODY

In order to efficient discharge the electrostatic charge from the housing of LED fitting installed on the pole from dielectric material (non-conductive) one of the following solutions is required:
- functional grounding
- LED luminaire with an additional protection device

TECHNICAL DRAWING

CUDDLE II LED ALFA REG D4i 48W, 60W, 72W

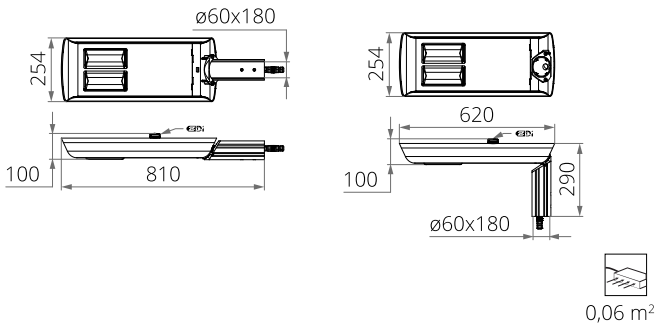

CUDDLE II LED ALFA REG D4i 96W, 120W, 144W, 192W

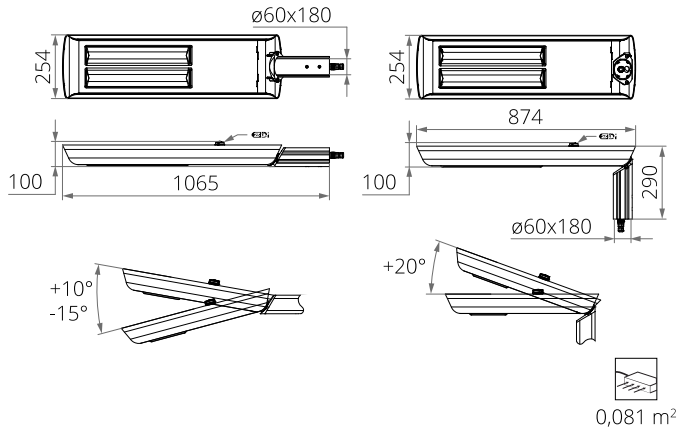

PHOTOMETRIC CURVES

Zakład Produkcji Sprzętu Oświetleniowego „ROSA" Sp. z o.o.
43-109 Tychy, ul. Strefowa 1 tel. +48 32 73 88 901
www.rosa.pl

CUDDLE II LED ALFA REG D4I

DW

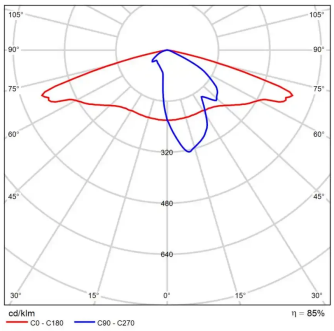

LM

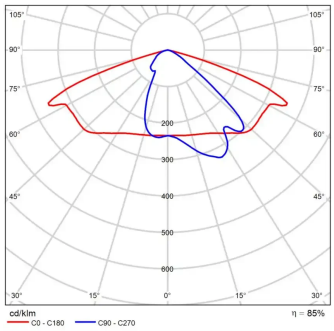

LW

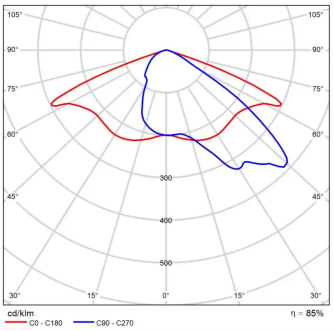

ME

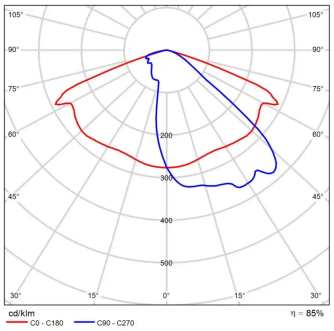

P2

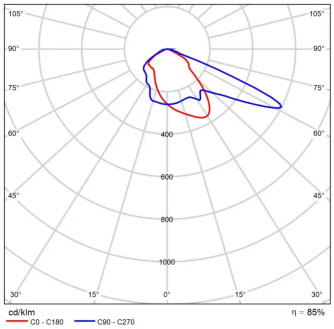

PL

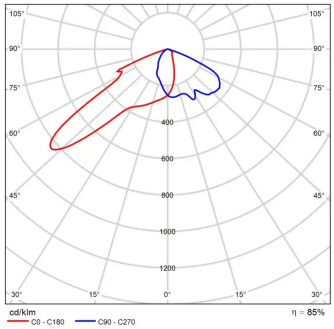

T2

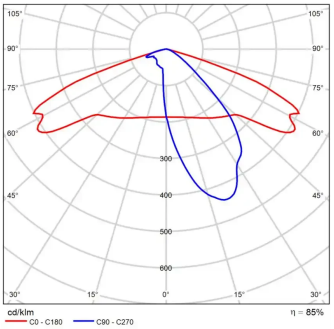

T3

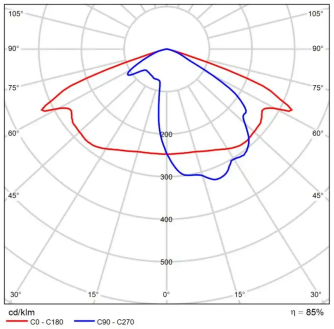

T4

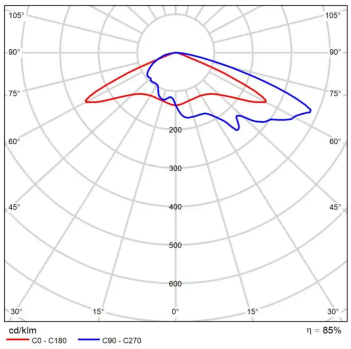

POWER SYSTEM FUNCTIONS

Luminaire in standard has following functions of intelligent power supply:

– Possibility of programming multistage dimming of luminaire, up to 5 intervals in the range of from 10 to 100% of nominal power,
– LED module equipped with thermal protection implemented via an NTC thermistor,
– Regulation of power / luminous flux – the option of setting another value than the catalogue in the range of 30-100% of nominal one,

Zakład Produkcji Sprzętu Oświetleniowego „ROSA” Sp. z o.o.
43-109 Tychy, ul. Strefowa 1 tel. +48 32 73 88 901
www.rosa.pl

CUDDLE II LED ALFA REG D4I

ACCETABLE QUANTITY OF LUMINAIRES ON ONE CIRCUIT

Overcurrent switches MCB type B or C

Luminaire	Typ	2A	4A	6A	10A	16A	20A	25A
CUDDLE II LED ALFA REG D4i 48 W, 60 W, 72 W	B	4	9	13	23	37	46	58
	C	4	9	13	23	37	46	58
CUDDLE II LED ALFA REG D4i 96 W, 120 W, 144 W	B	1	3	5	8	14	17	21
	C	1	4	7	11	19	23	29
CUDDLE II LED ALFA REG D4i 192 W	B	0	1	2	3	5	6	7
	C	0	2	3	5	8	10	13

Fuse – type gG and GL

Luminaire	2 A	4 A	6 A	10 A	16 A	20 A	25 A
CUDDLE II LED ALFA REG D4i 48 W, 60 W, 72 W	4	9	13	23	37	46	58
CUDDLE II LED ALFA REG D4i 96 W, 120 W, 144 W	2	4	7	11	19	23	29
CUDDLE II LED ALFA REG D4i 192 W	0	2	4	6	12	17	22

CHROMATYCZNOŚĆ

Chromatyczność	x	y
2700K	0,4582	0,4099
3500K	0,4080	0,3916
4000K	0,3825	0,3798
5000K	0,3451	0,3554

KOD FOTOMETRYCZNY

2700K	727/559
3500K	735/559
4000K	740/559
5000K	750/559

Zakład Produkcji Sprzętu Oświetleniowego „ROSA” Sp. z o.o.
43-109 Tychy, ul. Strefowa 1 tel. +48 32 73 88 901
www.rosa.pl