Aluminium column SAL-9 WŁ 2/1,5/3,2/5

176 mm at the base plate

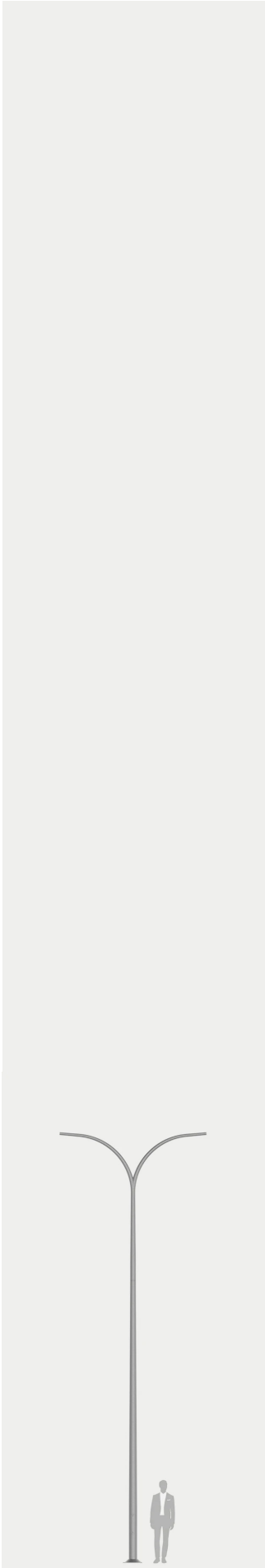

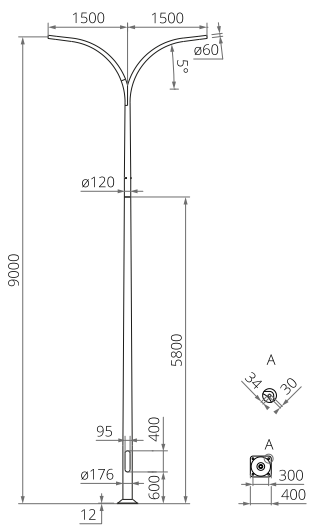

TECHNICAL DATA

Anodising	10 colours
Luminaire mounting	directly on the extension arm, luminaires with ø60 mm mounting with weight and surface parameters not exceeding the data from the strength table included in the technical data sheet
Packing	sleeve material
Performance under vehicle impact (passive safetly)	50-NE-C-S-SE-MD-0, 70-NE-C-S-SE-MD-0, 100-NE-C-S-SE-MD-0
Diameter at the base plate	176 mm
Finish	brushed anodised aluminium - anode coating thickness is 20µm as standard (coating thicness of 25µm is also possible), option of elastomer protection up to a height of 350 mm, in a colour similar to the anode colour (other heights or colours of elastomer available according to the RAL palette at the customer's request) - the thickness of the protective coating ranges from 0.8 mm to 1.2 mm
Ingress protection	IP54 for wire chamber

Carbon footprint (kg of CO_2 eq.) 141.75 kg

QUALITY LABEL INTERNATIONAL FOR ANODISING Qualanod ARCHITECTURE

CE EN 40 | NE | AI | 10 | RAL

TABLE OF VARIANTS

Code	Symbol	Height of the column [H]	Unit volume	Concrete footing / reinforcement basket type	Concrete footing / reinforcement basket code	Fasteners	Net weight
42420/C...	SAL-9 WŁ 2/1,5/3,2/5	9 m	0.73 m³	B-71 / Z-71	311171 / 311271	4012	59.1 kg

STRENGTH TABLE

SAL-9 WŁ 2/1,5/3,2/5	Acceptable windage of single luminaire[m²] for Cx=1			
code 42420	Vref. = 22 m/s	Vref. = 24 m/s	Vref. = 26 m/s	Vref. = 28 m/s
Permissible weight of a single luminaire [kg]	zone I, terrain category III	zone I & III, terrain category III up to 450m a.s.l	zone II, terrain category III	zone III, terrain category III up to 755m a.s.l.
15	0,32	0,24	0,17	0,13

ANODISING COLOURS

Updated at: 26-02-2026

Zakład Produkcji Sprzętu Oświetleniowego „ROSA" Sp. z o.o.
43-109 Tychy, ul. Strefowa 1 tel. +48 32 73 88 901
www.rosa.pl